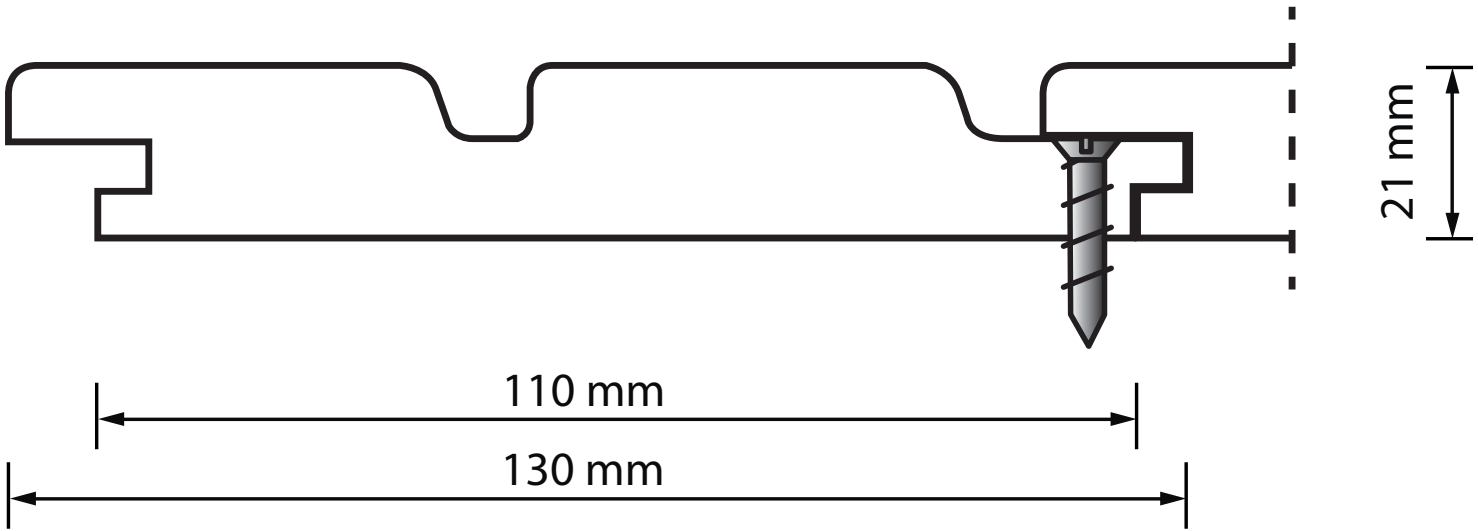10